Teupen
All Product Manuals

Our Unmatched Results

World Rank in MEWP Manufacturer*
3rd Rank

Market Share*
40% +

Countries Exported*
80+

Equipments Sold in India*
600+ Units

Happy Customers*
250+

Patents*
300+

SAARC Team Size*
50+ Service Engineers



DINGLI AWP INDIA PVT. LTD.

Sahney Towers, 81, First Floor,
Poonamallee High Road,
Nerkundram, Chennai, Tamil Nadu - 600 107

M - +91-98846 48464
E - support@dinglisaarc.com / customerrelations@dinglisaarc.com
www.dinglisaarc.com

Product specifications are subject to change without notice or obligation. Photographs and drawings in this document are for illustrative purposes only. Refer to the appropriate Operator´s Manual for instructions on the proper use of this equipment. Failure to follow the appropriate Operator´s Manual when using our equipment or to otherwise act irresponsibly may result in serious injury or death. The only warranty applicable to our equipment is the standard written warranty applicable to the particular product and sale and we make no other warranty, expressed or implied. Products and services listed may be trademarks, service marks or trade-names of TEUPEN Maschinenbau GmbH and/or its subsidiaries in the U.S.A. and many other countries. “TEUPEN”, “Access redefined“ and “LEO Series” are registered Trademarks of Teupen GmbH in the United States of America and many other countries. © 2021 TEUPEN Maschinenbau GmbH.

*Provided Data is calculated at set time

TEUPEN® ...access redefined

DINGLI®
Exceed · New Height

Scaling heights with precision & innovation.



Established in 2005, Dingli is one of the top 3 global industry leader with presence in 80 countries and regions including USA, Germany, and Japan.

The 4 factories of Dingli are built with the highest levels of automation, and focus on digital design, intelligent production & management, and collaborative eco-friendly manufacturing.

Dingli has dedicated R&D centers in the USA, Germany, and Italy, that focuses on innovation and enhanced productivity, technological innovation as the core tenet.

Dingli has independently developed more than 200 types of aerial work platforms that are widely applied in construction, commercial, and industrial fields in India and beyond.

Owning about 45% market share in India, Dingli has a dynamic team of professionals who are dedicated towards delivering excellence, and a strong network of dealers who play a vital role in ensuring that Dingli stays closer to its customer base.

Dingli's global presence focuses on delivering value backed by expertise and commitment. The transparent processes, superior quality, and 24/7 customer support has made Dingli a reliable industry leader in India.

Invested in a sustainable future, Dingli has adopted the core concepts of "carbon peak" and "carbon neutral" into its corporate governance process. This includes eco-friendly park construction, manufacturing, R&D, recycling & re-manufacturing, and green travel for employees.

In line with the trend of electrification, green energy, and intelligent innovations, Dingli has a comprehensive range of electric powered products.

Dingli will continue to deepen its R&D, production, and intelligent manufacturing process. Dingli is focused on implementing the new era of electrification of 'non-road mobile machinery' to lead a green transformation and provide long term energy saving solutions to our customers.

Dingli's Unique Strengths.

Owns 300+ patents for excellence in technological inventions

Has a current population of 600+ units to serve the customers in India

First in the industry to complete the electrification of a full range of products

Sole manufacturer of large load and modular electric boom lifts

Our Certifications

Country specific standards
Europe - CE(TUV), USA - ANSI, Australia - AS/NZ1418, Russia - CU-TR, Japan - JIS, Korea - KC

International standards
ISO 9001, ISO 14001, OHSAS18001

Awards & Accolades

IPAF's Annual Pioneer of Aerial Work Platforms

Access M20 Global Top 3 Manufacturers of Aerial Work Platforms

British KHL group's Top 50 Global Construction Machinery Manufacturers

Global Outreach

Dingli has established 10 overseas branches to facilitate a global sales network and has successfully invested in

1. **MAGNI,** a world renown telescopic handler enterprise in Ital
2. **MEC**, USA
3. **TEUPEN**, a global leader in spider aerial work platforms, Germany.

TEUPEN LEO Series

Engineered for use in confined places.

TEUPEN has been manufacturing and distributing industry-leading height access systems for over 45 years. Technical expertise and unconventional creative thinking combined with the high standards of German craftsmanship have since been the strengths of the TEUPEN allowing a history of groundbreaking technical innovations for the safety and comfort of our customers.

Why TEUPEN LEO Series?

1. Perfect for complex height access applications
2. Compact & agile to fit through a doorway
3. Light & gentle suitable for sensitive floors
4. Versatile than any other aerial work platform

Gentle on Floors, Bold on Heights: TEUPEN LEO Magic.





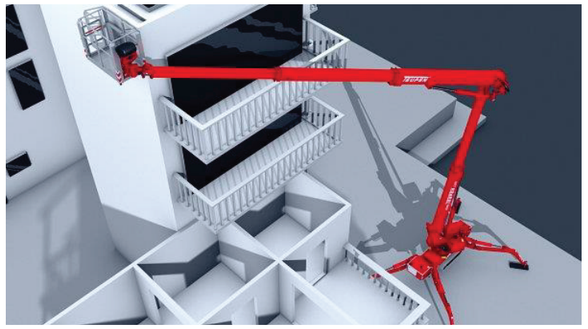



PRECISION POSITIONING

The revolutionary technology of the TEUPEN LEO Series ensures that the equipment is positioned exactly for maximum efficiency while accessing the unreachable heights.

DOORS & ALLEYWAYS

Designed for maximum accessibility, TEUPEN LEO equipments eases navigating seamlessly through standard doorways and narrow alleyways, expanding the scope of the reach.

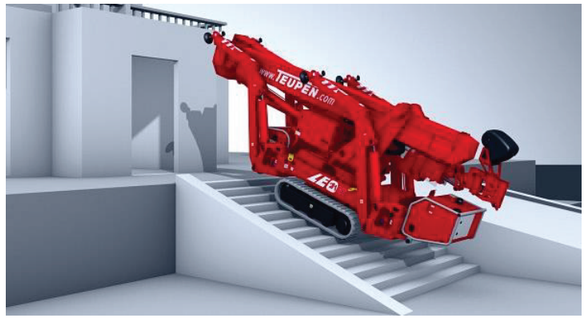



SLOPES & STAIRS

TEUPEN LEO Series equipments are built for versatility, providing capability to ascend or descend inclines and navigate staircases with ease.

EXACT MANEUVERING

Whether working in tight spaces or intricate environments, TEUPEN LEO's precision engineering allows to maneuver with accuracy, ensuring efficient operations.



STABILIZATION & LEVELLING

TEUPEN LEO equipments are equipped with advanced stabilization and leveling features, adapting to uneven surfaces to provide a secure and level platform for the operations.

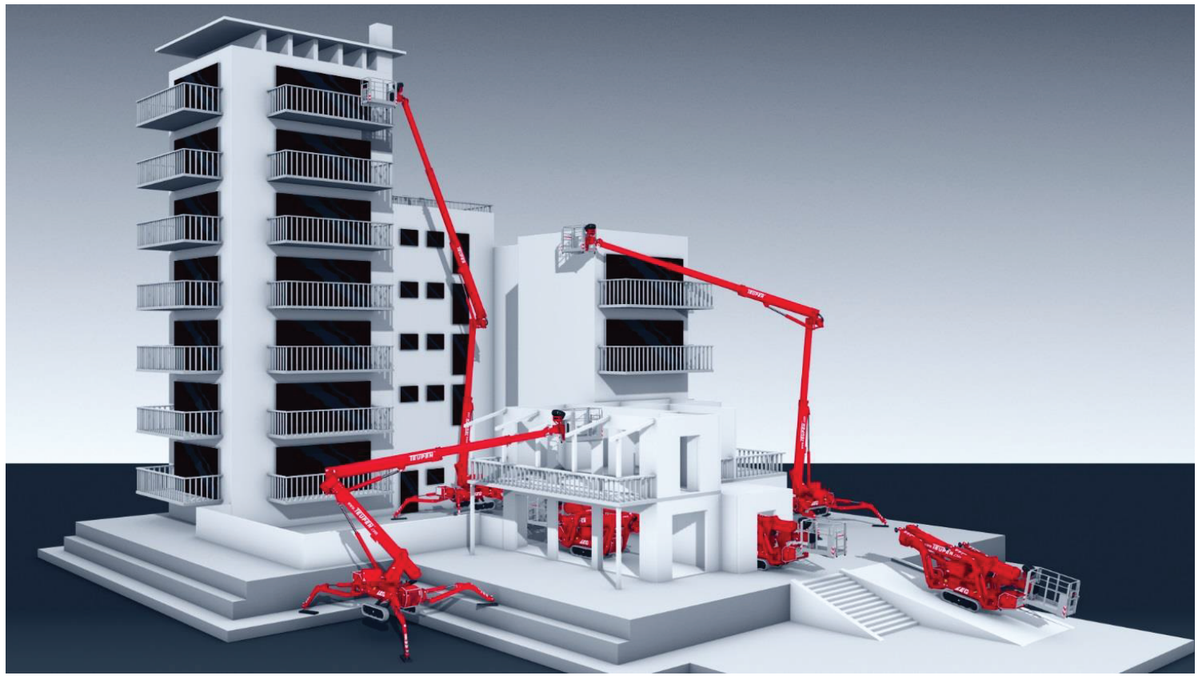

Applications

- Construction
- Cleaning & Maintenance
- Tree Care
- Facade Works
- Installations
- Facility Management
- Shopping Centers
- Hotels & Casinos
- Offices
- Universities
- Hospitals
- Museums & Art Centers
- Auditoriums & Stadiums
- Industrial Facilities & Hard to Reach Structures

30-39m	21-24m	12-18m
LEO 39GT PLUS	LEO 24GT	LEO 18GT PLUS
LEO 35T PLUS	LEO 23T	LEO 15GT
LEO 34GT PLUS	LEO 23GT	LEO 13GT
LEO 30T PLUS	LEO 21GT	LEO 12T

DINGLI
Exceed · New Height



LEO 39GT-Plus

LEO 39GTplus TEUPEN ...access redefined

PERFORMANCE

Working height, max.	38,60 m
Platform height, max.	36,60 m
Horizontal outreach, max. (400 kg)	18,30 m
Horizontal outreach, max. (300 kg)	20,20 m
Horizontal outreach, max. (140 kg)	23,30 m
Up and over clearance, max.	21,00 m
Negativ reach, max.	13,15 m
Platform capacitiy, max.	400 kg
Jib, movable	200 °
Platform, rotatable	2 x 220 °
Turntable rotation, max.	450 °
To be jacked up on ground slope of	16.7 ° / 30.0 %
Track drive, height- and width-adjustable	23 / 12 cm
Gradeability, max.	16.7 ° / 30.0 %
Slope angle, max.	16.7 ° / 30.0 %
Travel speed, max.	3,0 km/h

MEASUREMENTS*

Platform (height) (A)	1,10 m
Platform (length) (B)	1,50 m
Platform (width) (C)	0,8 m
Length (D)	7,85 m
Length without platform (E)	7,00 m
Height (F)	1,99 m
Width, min. (G)	1,59 m
Ground clearance, max. (H)	0,40 m
Track (length x width) (I)	2,12 x 0,30 m
Outrigger footprint both side wide (length) (J)	5,31 m
Outrigger footprint both side wide (width) (K)	5,20 m
Outrigger footprint one side narrow (length) (L)	7,30 m
Outrigger footprint one side narrow (width) (M)	4,00 m
Outrigger footprint both sides narrow (width) (N)	2,70 m
Outrigger plate (length x width)	0,50 m x 0,22 m

WEIGHT*

Total weight	8750 kg
Live load in travelling position	6,60 kN/m²
Live load in working position	3,25 kN/m²
Point load per outrigger plate, max.	62,50 kN

POWER SOURCES

Standard power sources:

■ Electric motor	(country-specific 3-phases)
■ Combustion engine (Diesel)	Kubota D1305 (18,0 kW / 24,47 PS)
Fuel tank capacity (Diesel engine)	32,00 l

POWER SUPPLY

Electric current, max.	country-specific, on request

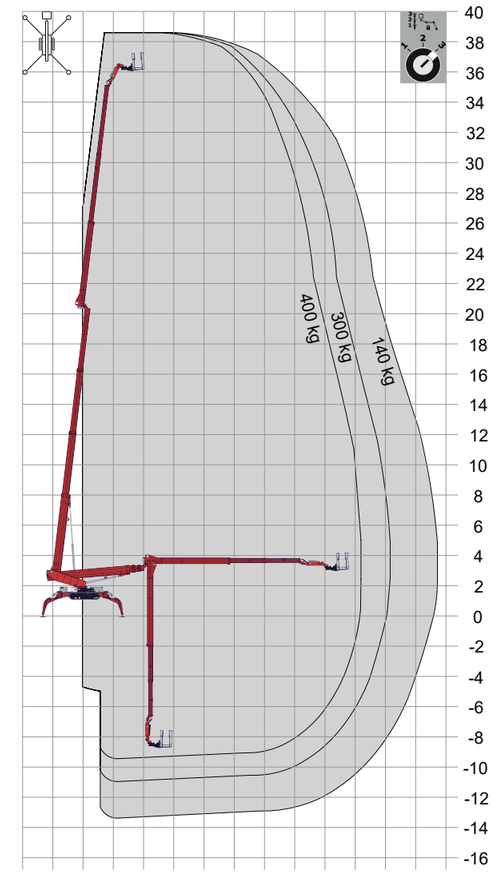

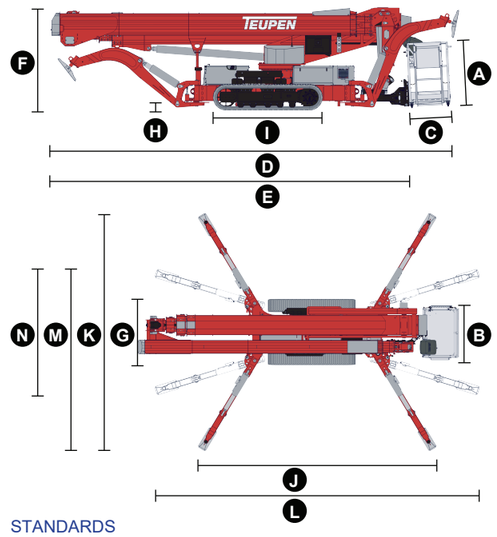

STANDARDS

Harmonised standard DIN EN 280:2016

Exceed · New Height



LEO 39T-Plus

LEO 35T plus

TEUPEN ...access redefined

PERFORMANCE

Working height, max. (300 kg / 400 kg)	35,00 m / 32,00 m
Working height, max. (both sides narrow)	30,00 m
Working height, max. (one sides narrow)	32,00 m
Platform height (300 kg / 400 kg)	33,00 m / 30,00 m
Platform height, max. (both side narrow)	28,00 m
Platform height, max. (one side narrow)	30,00 m
Horizontal outreach, max. (400 kg)	13,00 m
Horizontal outreach, max. (300 kg)	14,00 m
Horizontal outreach, max. (140 kg)	16,00 m
Horizontal outreach, max. (both sides narrow)	14,50 m
Platform capacitiy, max.	400 kg
Platform capacitiy, max. (both sides narrow)	250 kg
Jib, movable	180 °
Platform, rotatable	180 °
Turntable rotation, max.	450 °
To be jacked up on ground slope of	16,7 ° / 30,0 %
Track drive, height- and width-adjustable	24 / 22 cm
Gradeability, max.	16,7 ° / 30,0 %
Slope angle, max.	21,0 ° / 38,0 %
Travel speed, max.	3,0 km/h

MEASUREMENTS*

Platform (height) (A)	1,10 m
Platform (length) (B)	1,20 m
Platform (width) (C)	0,80 m
Length (D)	8,00 m
Length without platform (E)	7,80 m
Height (F)	1,99 m
Width, min. (G)	1,58 m
Ground clearance, max. (H)	0,43 m
Track (length x width) (I)	1,92 x 0,25 m
Outrigger footprint both side wide (length) (J)	5,51 m
Outrigger footprint both side wide (width) (K)	5,60 m
Outrigger footprint one side narrow (length) (L)	7,55 m
Outrigger footprint one side narrow (width) (M)	4,30 m
Outrigger footprint both sides narrow (width) (N)	2,99 m
Outrigger plate (length x width)	0,31 m x 0,22 m

WEIGHT*

Total weight	5500 kg
Live load in travelling position	4.17 kN/m²
Live load in working position	2.16 kN/m²
Point load per outrigger plate, max.	36.00 kN

POWER SOURCES

Standard power sources:	
■ Electric motor	(country-specific 1-phase)
■ Combustion engine (Diesel)	Kubota D902 (16,1 kW / 21,6 hp)
Optional power source:	
■ Battery drive (AGM)	80 V
Fuel tank capacity (Diesel engine)	39,0 l

POWER SUPPLY

Electric current, max.	country-specific, on request

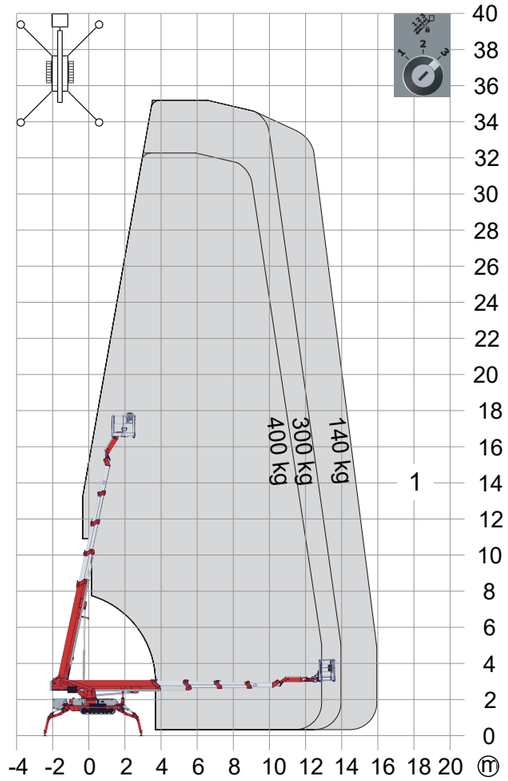

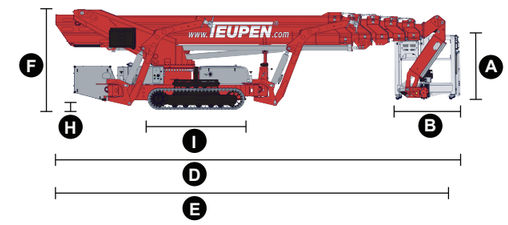

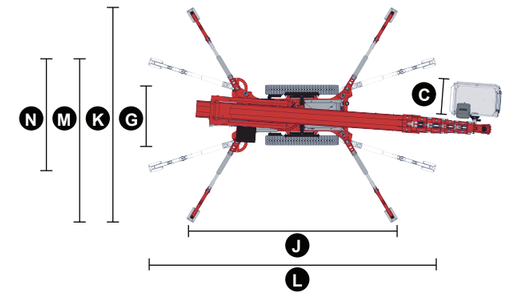

STANDARDS

Harmonised standard DIN EN 280:2016



LEO 34GT-Plus

LEO 34GTplus TEUPEN ...access redefined

PERFORMANCE

Working height, max.	34,10 m
Platform height, max.	32,10 m
Horizontal outreach, max. (400 kg)	18,00 m
Horizontal outreach, max. (300 kg)	18,90 m
Horizontal outreach, max. (140 kg)	19,90 m
Up and over clearance, max.	21,00 m
Negativ reach, max.	9,20 m
Platform capacitiy, max.	400 kg
Jib, movable	200 °
Platform, rotatable	2 x 220 °
Turntable rotation, max.	450 °
To be jacked up on ground slope of	16.7 ° / 30.0 %
Track drive, height- and width-adjustable	23 / 12 cm
Gradeability, max.	16.7 ° / 30.0 %
Slope angle, max.	16.7 ° / 30.0 %
Travel speed, max.	3,0 km/h

MEASUREMENTS*

Platform (height) (A)	1,10 m
Platform (length) (B)	1,50 m
Platform (width) (C)	0,8 m
Length (D)	7,85 m
Length without platform (E)	7,00 m
Height (F)	1,99 m
Width, min. (G)	1,59 m
Ground clearance, max. (H)	0,40 m
Track (length x width) (I)	2,12 x 0,30 m
Outrigger footprint both side wide (length) (J)	5,31 m
Outrigger footprint both side wide (width) (K)	5,20 m
Outrigger footprint one side narrow (length) (L)	7,30 m
Outrigger footprint one side narrow (width) (M)	4,00 m
Outrigger footprint both sides narrow (width) (N)	2,70 m
Outrigger plate (length x width)	0,50 m x 0,22 m

WEIGHT*

Total weight	8210 kg
Live load in travelling position	6,20 kN/m²
Live load in working position	3,06 kN/m²
Point load per outrigger plate, max.	57,70 kN

POWER SOURCES

Standard power sources:

■ Electric motor	(country-specific 3-phases)
■ Combustion engine (Diesel)	Kubota D1305 (18,0 kW / 24,47 PS)
Fuel tank capacity (Diesel engine)	32,00 l

POWER SUPPLY

Electric current, max.	country-specific, on request

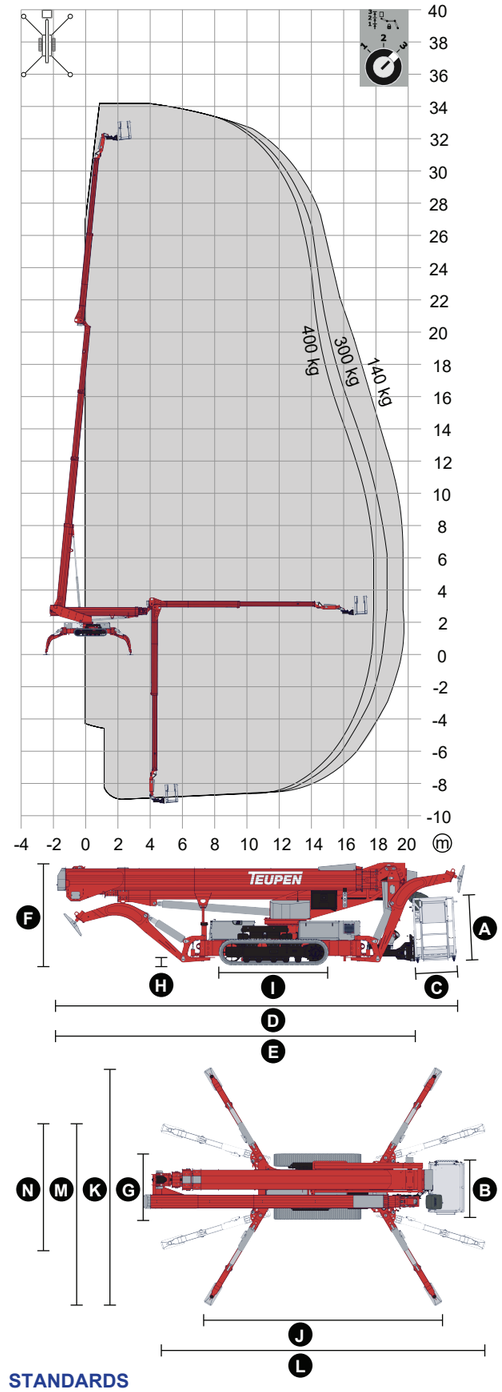

STANDARDS

Harmonised standard DIN EN 280:2016



LEO 30T-Plus

LEO 30T plus

TEUPEN ...access redefined

PERFORMANCE

Working height, max. (300 kg / 400 kg)	30,00 m / 27,00 m
Working height, max. (both sides narrow)	25,00 m
Working height, max. (one sides narrow)	27,00 m
Platform height (300 kg / 400 kg)	28,00 m / 25,00 m
Platform height, max. (both side narrow)	23,00 m
Platform height, max. (one side narrow)	25,00 m
Horizontal outreach, max. (400 kg)	12,70 m
Horizontal outreach, max. (300 kg)	14,00 m
Horizontal outreach, max. (140 kg)	16,00 m
Horizontal outreach, max. (both sides narrow)	14,50 m
Platform capacitiy, max.	400 kg
Platform capacitiy, max. (both sides narrow)	250 kg
Jib, movable	180 °
Platform, rotatable	180 °
Turntable rotation, max.	450 °
To be jacked up on ground slope of	16,7 ° / 30,0 %
Track drive, height- and width-adjustable	24 / 22 cm
Gradeability, max.	16,7 ° / 30,0 %
Slope angle, max.	21,0 ° / 38,0 %
Travel speed, max.	3,0 km/h

MEASUREMENTS*

Platform (height) (A)	1,10 m
Platform (length) (B)	1,20 m
Platform (width) (C)	0,80 m
Length (D)	7,70 m
Length without platform (E)	7,50 m
Height (F)	1,98 m
Width, min. (G)	1,58 m
Ground clearance, max. (H)	0,43 m
Track (length x width) (I)	1,92 x 0,25 m
Outrigger:	
n wide (length) (J) X (wide) (K)	5,51 m/5,60 m
n narrow (length) (L) X (length) (M)	7,55 m/ 2,99 m
n left or right narrow (width) (N)	4,30 m
n front or back narrow (length) (O)	6,53 m
Outrigger plate (length x width)	0,31 m x 0,22 m

WEIGHT*

Total weight	4550 kg
Live load in travelling position	3,60 kN/m²
Live load in working position	1,81 kN/m²
Point load per outrigger plate, max.	32,00 kN

POWER SOURCES

Standard power sources:	
■ Electric motor	(country-specific 1-phase)
■ Combustion engine (Diesel)	Kubota D902 (16,1 kW / 21,6 hp)
Optional power source:	
■ Battery drive (AGM)	80 V
Fuel tank capacity (Diesel engine)	39,0 l

POWER SUPPLY

Electric current, max.	country-specific, on request

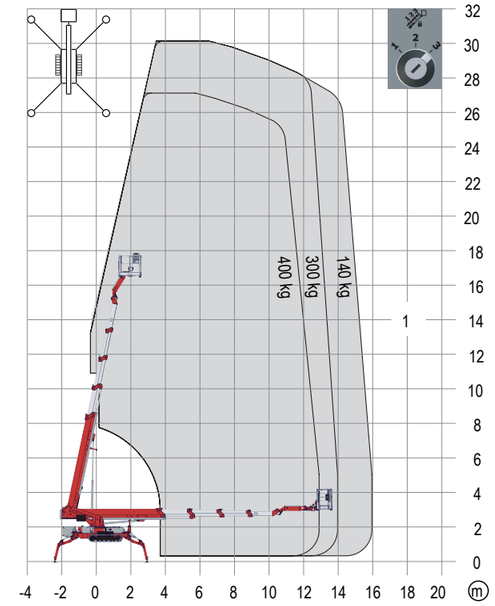

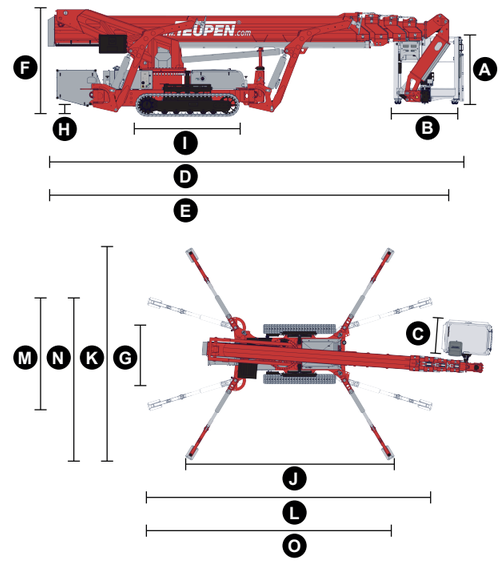

STANDARDS

Harmonised standard DIN EN 280:2016



LEO 24GT

PERFORMANCE

Working height, max.	24,00 m
Platform height, max.	22,00 m
Horizontal outreach, max. (250 kg)	12,00 m
Up and over clearance, max.	12,69 m
Platform capacitiy, max.	250 kg
Jib, movable	-
Platform, rotatable	180 °
Turntable rotation, max.	450 °
To be jacked up on ground slope of	19.0 ° / 34.0 %
Track drive, height- and width-adjustable	19 / 46 cm
Gradeability, max.	16,7 ° / 30,0 %
Slope angle, max.	19,0 ° / 34,0 %
Travel speed, max.	2,0 km/h

MEASUREMENTS*

Platform (height) (A)	1,10 m
Platform (length) (B)	1,40 m
Platform (width) (C)	0,70 m
Length (D)	6,40 m
Length without platform (E)	5,05 m
Height (F)	1,99 m
Width, min. (G)	0,98 m
Ground clearance, max. (H)	0,44 m
Track (length x width) (I)	1,45 x 0,20 m
Outrigger footprint both side wide (length) (J)	4,70 m
Outrigger footprint both side wide (width) (K)	4,70 m
Outrigger footprint one side narrow (length) (L)	6,30 m
Outrigger footprint one side narrow (width) (M)	3,65 m
Outrigger footprint both sides narrow (width) (N)	2,65 m
Outrigger plate Ø	0,18 m

WEIGHT*

Total weight	3300 kg
Live load in travelling position	4,40 kN/m²
Live load in working position	1,72 kN/m²
Point load per outrigger plate, max.	23,70 kN

POWER SOURCES

Standard power sources:	
■ Electric motor	(country-specific 1-phase)
■ Combustion engine (petrol)	Vanguard OHV 16HP (11,93 kW / 16,0 hp)
Optional power source:	
■ Combustion engine (Diesel)	Kubota Z602 (10,8 kW / 14,5 hp)
■ Battery drive (AGM)	48 V
Fuel tank capacity (petrol engine)	11,5 l
Fuel tank capacity (Diesel engine)	11,5 l

POWER SUPPLY

Electric current, max.	country-specific, on request

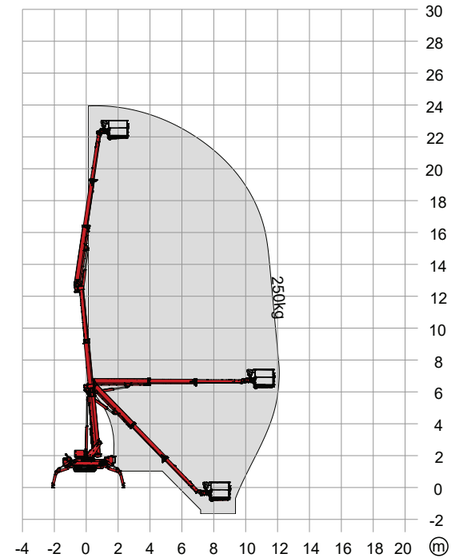

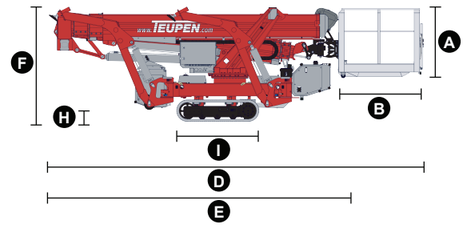

STANDARDS

Harmonised standard DIN EN 280:2016



LEO 23T

PERFORMANCE

Working height, max.	23,20 m
Platform height, max.	21,20 m
Horizontal outreach, max. (250 kg)	12,50 m
Horizontal outreach, max. (80 kg)	15,60 m
Platform capacitiy, max.	250 kg
Jib, movable	180 °
Platform, rotatable	180 °
Turntable rotation, max.	450 °
To be jacked up on ground slope of	16,7 ° / 30,0 %
Track drive, height- and width-adjustable	19 / 46 cm
Gradeability, max.	16,7 ° / 30,0 %
Slope angle, max.	19,0 ° / 34,0 %
Travel speed, max.	4,0 km/h

MEASUREMENTS*

Platform (height) (A)	1,10 m
Platform (length) (B)	1,20 m
Platform (width) (C)	0,80 m
Length (D)	6,20 m
Length without platform (E)	6,20 m
Height (F)	1,99 m
Width, min. (G)	0,99 m
Ground clearance, max. (H)	0,42 m
Track (length x width) (I)	1,45 x 0,20 m
Outrigger footprint both side wide (length) (J)	4,70 m
Outrigger footprint both side wide (width) (K)	4,70 m
Outrigger footprint one side narrow (length) (L)	6,30 m
Outrigger footprint one side narrow (width) (M)	3,65 m
Outrigger footprint both sides narrow (width) (N)	2,65 m
Outrigger plate Ø	0,18 m

WEIGHT*

Total weight	3050 kg
Live load in travelling position	3,90 kN/m²
Live load in working position	1,60 kN/m²
Point load per outrigger plate, max.	23,70 kN

POWER SOURCES

Standard power sources:

■ Electric motor	(country-specific 1-phase)
■ Combustion engine (Diesel)	Kubota Z602 (10,8 kW / 14,5 hp)
Fuel tank capacity (Diesel engine)	25,0 l

POWER SUPPLY

Electric current, max.	country-specific, on request

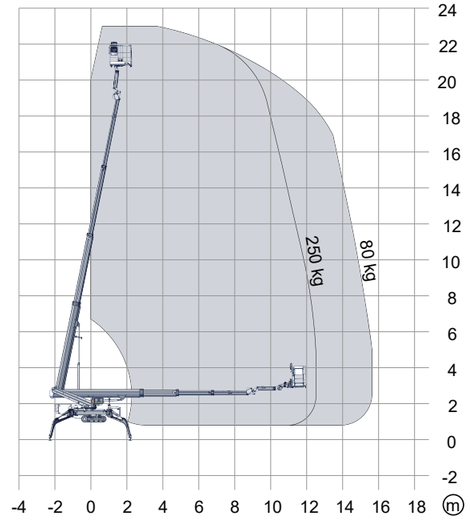

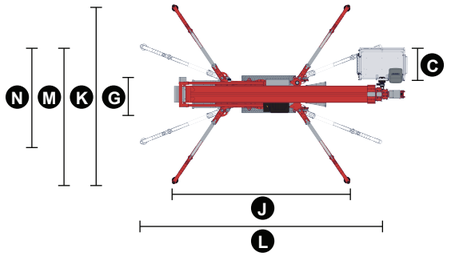

STANDARDS

Harmonised standard DIN EN 280:2016



LEO 23GT

LEO 23T

TEUPEN ...access redefined

PERFORMANCE

Working height, max.	23,00 m
Platform height, max.	21,00 m
Horizontal outreach, max. (200 kg)	11,20 m
Up and over clearance, max.	11,50 m
Platform capacitiy, max.	200 kg
Jib, movable	-
Platform, rotatable	180 °
Turntable rotation, max.	360 °
To be jacked up on ground slope of	16,7 ° / 30,0 %
Track drive, height- and width-adjustable	23 / 45 cm
Gradeability, max.	16,7 ° / 30,0 %
Slope angle, max.	15,5 ° / 27,0 %
Travel speed, max.	1,3 km/h

MEASUREMENTS*

Platform (height) (A)	1,10 m
Platform (length) (B)	1,40 m
Platform (width) (C)	0,70 m
Length (D)	6,20 m
Length without platform (E)	-
Height (F)	1,97 m
Width, min. (G)	0,98 m
Ground clearance, max. (H)	0,40 m
Track (length x width) (I)	1,45 x 0,20 m
Outrigger footprint both side wide (length) (J)	4,53 m
Outrigger footprint both side wide (width) (K)	4,33 m
Outrigger footprint one side narrow (length) (L)	5,98 m
Outrigger footprint one side narrow (width) (M)	3,42 m
Outrigger footprint both sides narrow (width) (N)	2,58 m
Outrigger plate Ø	0,18 m

WEIGHT*

Total weight	2990 kg
Live load in travelling position	4,02 kN/m²
Live load in working position	1,78 kN/m²
Point load per outrigger plate, max.	22,40 kN

POWER SOURCES

Standard power sources:	
■ Electric motor	(country-specific 1-phase)
■ Combustion engine (Diesel)	Kubota Z602 (10,8 kW / 14,5 hp)
Optional power source:	
■ Battery drive (AGM)	48 V
Fuel tank capacity (Diesel engine)	12,0 l

POWER SUPPLY

Electric current, max.	country-specific, on request

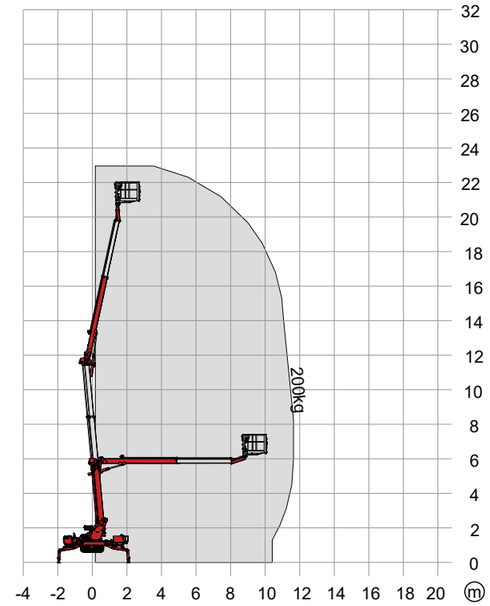

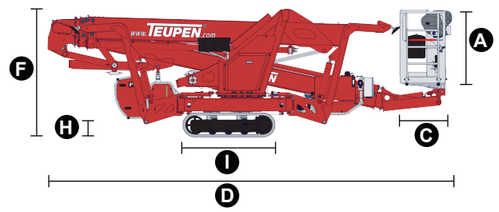

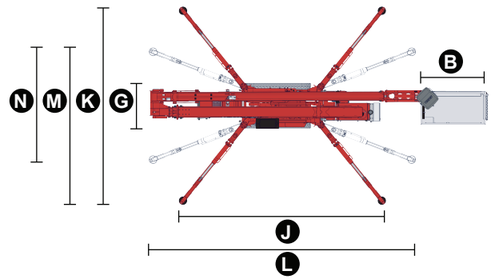

STANDARDS

Harmonised standard DIN EN 280:2016



LEO 21GT

PERFORMANCE

Working height, max.	21,00 m
Platform height, max.	19,00 m
Horizontal outreach, max. (250 kg)	12,00 m
Up and over clearance, max.	9,44 m
Platform capacitiy, max.	250 kg
Jib, movable	-
Platform, rotatable	180 °
Turntable rotation, max.	450 °
To be jacked up on ground slope of	19.0 ° / 34.0 %
Track drive, height- and width-adjustable	19 / 46 cm
Gradeability, max.	16,7 ° / 30,0 %
Slope angle, max.	19,0 ° / 34,0 %
Travel speed, max.	2,0 km/h

MEASUREMENTS*

Platform (height) (A)	1,10 m
Platform (length) (B)	1,40 m
Platform (width) (C)	0,70 m
Length (D)	6,40 m
Length without platform (E)	5,05 m
Height (F)	1,99 m
Width, min. (G)	0,98 m
Ground clearance, max. (H)	0,44 m
Track (length x width) (I)	1,45 x 0,20 m
Outrigger footprint both side wide (length) (J)	4,70 m
Outrigger footprint both side wide (width) (K)	4,70 m
Outrigger footprint one side narrow (length) (L)	6,30 m
Outrigger footprint one side narrow (width) (M)	3,65 m
Outrigger footprint both sides narrow (width) (N)	2,65 m
Outrigger plate Ø	0,18 m

WEIGHT*

Total weight	3000 kg
Live load in travelling position	3,86 kN/m²
Live load in working position	1,58 kN/m²
Point load per outrigger plate, max.	23,70 kN

POWER SOURCES

Standard power sources:	
■ Electric motor	(country-specific 1-phase)
■ Combustion engine (petrol)	Vanguard OHV 16HP (11,93 kW / 16,0 hp)
Optional power source:	
■ Combustion engine (Diesel)	Kubota Z602 (10,8 kW / 14,5 hp)
■ Battery drive (AGM)	48 V
Fuel tank capacity (petrol engine)	11,5 l
Fuel tank capacity (Diesel engine)	11,5 l

POWER SUPPLY

Electric current, max.	country-specific, on request

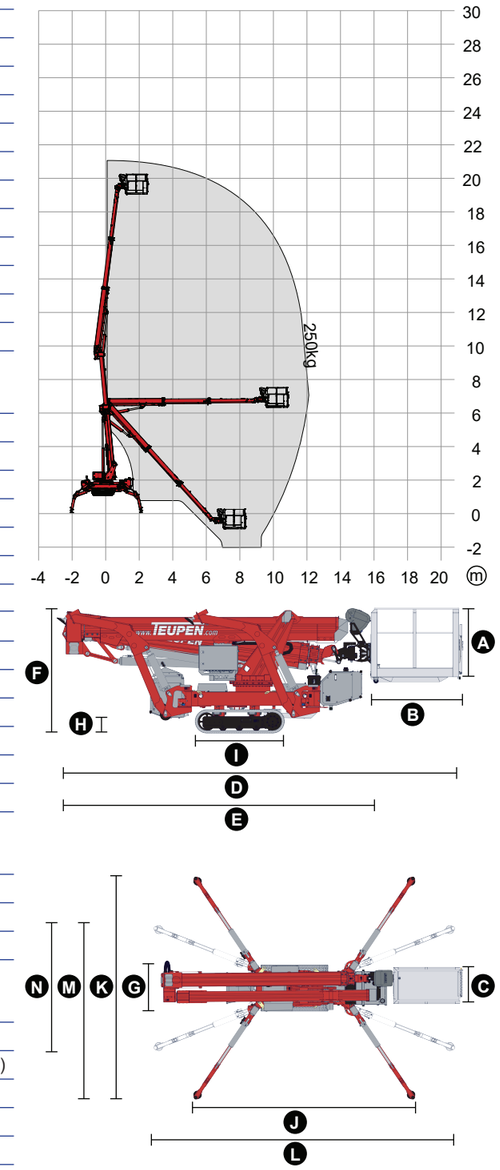

STANDARDS

Harmonised standard DIN EN 280:2016



LEO 18GT-Plus

LEO 18 GT plus TEUPEN ...access redefined

PERFORMANCE

Working height, max.	18,30 m
Platform height, max.	16,30 m
Horizontal outreach, max. (200 kg)	8,50 m
Up and over clearance, max.	8,30 m
Platform capacitiy, max.	200 kg
Jib, movable	90 °
Turntable rotation, max.	355 °
To be jacked up on ground slope of	12,0 ° / 21,0 %
Track drive, height- and width-adjustable	8 / 16 cm
Gradeability, max.	19,7 ° / 35,5 %
Slope angle, max.	16,7 ° / 30,0 %
Travel speed, max.	1,8 km/h

MEASUREMENTS*

Platform (height) (A)	1,10 m
Platform (length) (B)	1,40 m
Platform (width) (C)	0,70 m
Length (D)	5,20 m
Length without platform (E)	4,50 m
Height (F)	1,99 m
Width, min. (G)	0,78 m
Ground clearance, max. (H)	0,25 m
Track (length x width) (I)	1,45 x 0,20 m
Outrigger footprint (length) (J)	3,31 m
Outrigger footprint (width) (K)	3,03 m
Outrigger plate Ø	0,18 m

WEIGHT*

Total weight	2650 kg
Live load in travelling position	7.88 kN/m²
Live load in working position	3,13 kN/m²
Point load per outrigger plate, max.	17,30 kN

POWER SOURCES

Standard power sources:	
■ Electric motor	(country-specific 1-phase)
■ Combustion engine (petrol)	Vanguard OHV 16HP(11,93 kW / 16,0 hp)
Optional power source:	
■ Combustion engine (Diesel)	Kubota Z602 (10,8 kW / 14,5 hp)
■ Battery drive (AGM)	48 V
Fuel tank capacity (petrol engine)	12,0 l
Fuel tank capacity (Diesel engine)	12,0 l

POWER SUPPLY

Electric current, max.	country-specific, on request

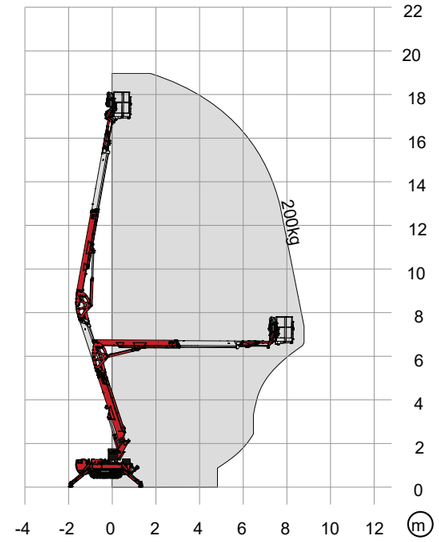

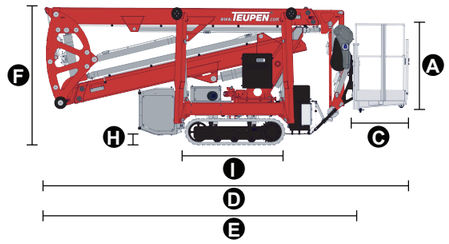

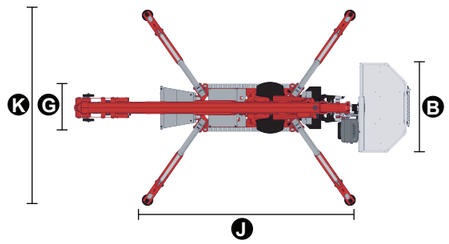

STANDARDS

Harmonised standard DIN EN 280:2016



LEO 15GT

PERFORMANCE

Working height, max.	14,70 m
Platform height, max.	12,70 m
Horizontal outreach, max. (200 kg)	7,60 m
Up and over clearance, max.	5,40 m
Platform capacitiy, max.	200 kg
Jib, movable	-
Turntable rotation, max.	355 °
To be jacked up on ground slope of	13,0 ° / 23,0 %
Track drive, height- and width-adjustable	12 / 18 cm
Gradeability, max.	16,7 ° / 30,0 %
Slope angle, max.	16,7 ° / 30,0 %
Travel speed, max.	1,0 km/h

MEASUREMENTS*

Platform (height) (A)	1,10 m
Platform (length) (B)	1,40 m
Platform (width) (C)	0,70 m
Length (D)	5,25 m
Length without platform (E)	4,52 m
Height (F)	1,99 m
Width, min. (G)	0,78 m
Ground clearance, max. (H)	0,42 m
Track (length x width) (I)	1,33 m x 0,18 m
Outrigger footprint (length) (J)	3,61 m
Outrigger footprint (width) (K)	3,15 m
Outrigger plate Ø	0,18 m

WEIGHT*

Total weight	1790 kg
Live load in travelling position	4,63 kN/m²
Live load in working position	1,92 kN/m²
Point load per outrigger plate, max.	12,80 kN

POWER SOURCES

Standard power sources:	
■ Electric motor	(country-specific 1-phase)
■ Combustion engine (Diesel)	Hatz 1B30 (5,4 kW / 7,2 hp)
Optional power sources:	
■ Battery drive (AGM)	48 V
Fuel tank capacity (Diesel engine)	5,0 l

POWER SUPPLY

Electric current, max.	country-specific, on request

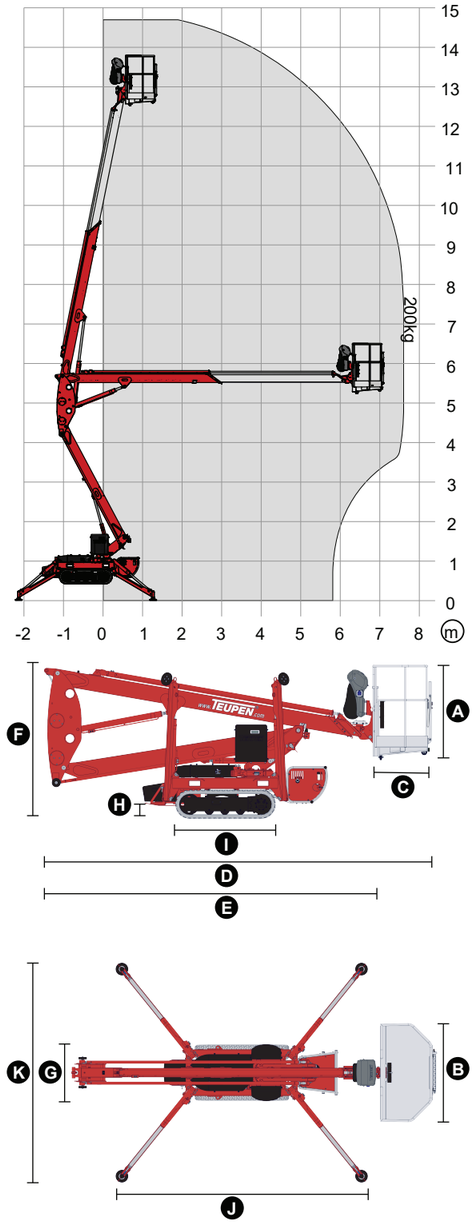

STANDARDS

Harmonised standard DIN EN 280:2016



LEO 13GT

LEO 13 GT

TEUPEN ...access redefined

PERFORMANCE

Working height, max.	12,75 m
Platform height, max.	10,75 m
Horizontal outreach, max. (200 kg)	6,05 m
Up and over clearance, max.	4,60 m
Platform capacitiy, max.	200 kg
Jib, movable	-
Turntable rotation, max.	355 °
To be jacked up on ground slope of	10,0 ° / 17,5 %
Track drive, height- and width-adjustable	-
Gradeability, max.	14,4 °/25,5 %
Slope angle, max.	14,4 ° / 25,5 %
Travel speed, max.	1,0 km/h

MEASUREMENTS*

Platform (height) (A)	1,10 m
Platform (length) (B)	1,40 m
Platform (width) (C)	0,70 m
Length (D)	4,75 m
Length without platform (E)	4,00 m
Height (F)	1,99 m
Width, min. (G)	0,78 m
Ground clearance, max. (H)	0,40 m
Track (length x width) (I)	1,18 x 0,18 m
Outrigger footprint (length) (J)	3,69 m
Outrigger footprint (width) (K)	2,86 m
Outrigger plate Ø	0,18 m

WEIGHT*

Total weight	1450 kg
Live load in travelling position	4,31 kN/m²
Live load in working position	1,75 kN/m²
Point load per outrigger plate, max.	11,70 kN

POWER SOURCES

Standard power sources:	
■ Electric motor	(country-specific 1-phase)
■ Combustion engine (Diesel)	Hatz 1B30 (5,4 kW / 7,2 hp)
Optional power sources:	
■ Battery drive (AGM)	48 V
Fuel tank capacity (Diesel engine)	5,0 l

POWER SUPPLY

Electric current, max.	country-specific, on request

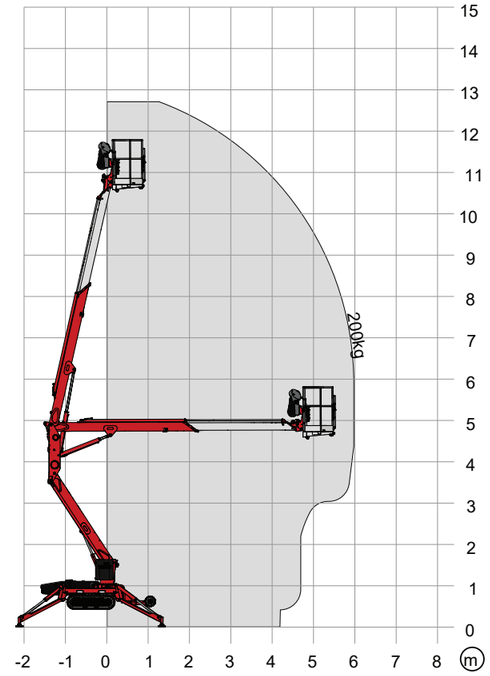

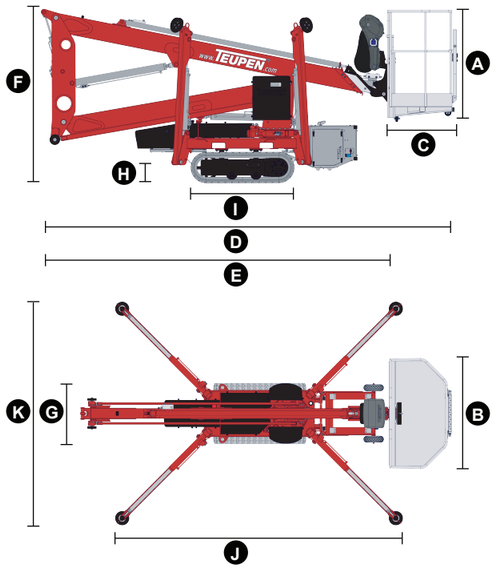

STANDARDS

Harmonised standard DIN EN 280:2016



LEO 12T

LEO 12T

TEUPEN ...access redefined

PERFORMANCE

Working height, max.	12,00 m
Platform height, max.	10,00 m
Horizontal outreach, max. (120 kg)	8,45 m
Platform capacitiy, max.	120 kg
Jib, movable	-
Turntable rotation, max.	220 °
Track drive, height- and width-adjustable	-
Gradeability, max.	8,5 ° / 15,0 %
Slope angle, max.	8,5 ° / 15,0 %
Travel speed, max.	1,2 km/h

MEASUREMENTS*

Platform (height) (A)	1,10 m
Platform (length) (B)	0,90 m
Platform (width) (C)	0,80 m
Length (D)	4,75 m
Length without platform (E)	2,80 m
Height (F)	1,99 m
Width, min. (G)	1,76 m
Track (length x width) (H)	2,20 x 0,25 m

WEIGHT*

Total weight	2985 kg
Live load in travelling position	4,15 kN/m²
Live load in working position	4,15 kN/m²

POWER SOURCES

Standard power sources:	
■ Battery drive	(24 V, 450 Ah, 4,5 kW)
Optional power sources:	
■ Electric motor	(country-specific 1-phase)
■ Combustion engine (Diesel)	Kubota Z602(10,8 kW / 14,5 hp)
Fuel tank capacity (Diesel engine)	13,0 l

POWER SUPPLY

Electric current, max.	country-specific, on request

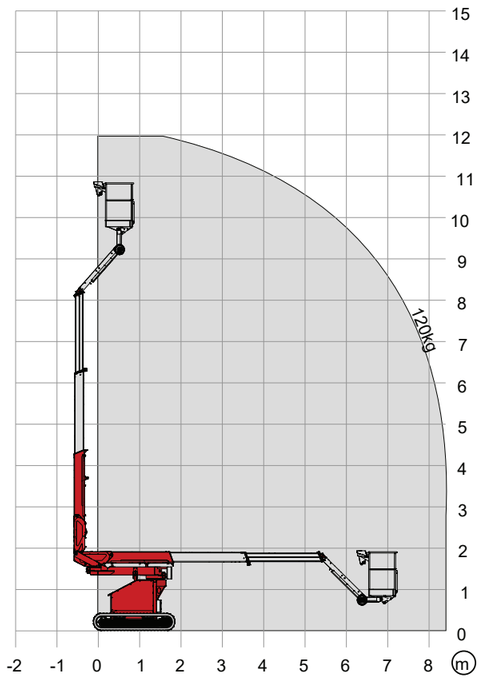

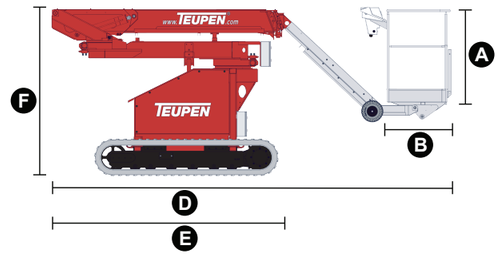

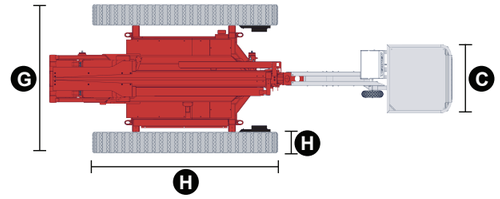

STANDARDS

Harmonised standard DIN EN 280:2016






TEUPEN
hyLIFT


TEUPEN
TC69A

